

VoIP Weatherproof Phones KNSP-08L2D6

DESCRIPTION

1. Robust aluminium alloy die-cast body, Vandal resistant and tamper-resistant hardware, simple installation.
2. Full keypad with memory, 10 button programmable, support free dial.
3. With external 30W loud speaker.Material:metal. Impeddance:8Ω.Freq.Resp:300-7000HZ. S.P.L:(1M/W):108dB. Megenet:ALum
4. With red flash Light. Work voltage: 12V DC/10W
5. Lightening protection to ITU-Trecommendation K.21.
6. Heavy Duty handset with hearingAid compatible receiver,Noise canceling microphone.
7. Handset with industrial strong curly cord .
8. Silicon keypad keep waterproof and dusty proof.
9. Door cover: orient automatically and good self - closing, convenient for use.
10. Temperature range from -40 degree to +70 degree.
11. Support echo cancellation.
12. Remote software upgrade, configuration and monitoring.
13. Optional 7 minute time out to release the line if the handset is left off hook.This function upon buyer's requirement).
14. Powder coated in UV stabilized polyester finish.
15. The housing covered with a layer of reflective label for easy identification at night.Optional 16. Application: Tunnel, metro, railway, LRT, speedway, marine, ship,offshore, mine, power plant, bridge etc.



SPECIFICATION

VoIP SIP2.0 telephone DTMF dialing

MTBF:100000hours MTTR: 2 hours

Free dial (maximum length of each number is 16 digits)

Communication: Full duplex 2-way hands-free communication

Call Control Signaling:VOIP SIP Info(DTMF), RFC 2833(DTMF)

Power:Power over Ethernet, IEEE802.3af, Class 0

Local power, 12VDc,Idle 2W, Max 10W

Auxiliary Contacts:1 Aux Output, dry contact

Contact Ratings. Load: Resistive load

Rated load:0.3 A at 125 VAC; 1 A at 30 VDC

Rated carry current:1A

Max.switching voltage:125 VAC,60VDC

Max.switching current:1A

Audio Codes:G.711, G.722, G.729

Network:10/100 BaseTX Ethernet, RJ45 connectors, Cat5e or better

IP Protocols:IPv4, TCP, UDP, TFTP, RTP, RTCP, DHCP, SIP

LAN Protocols:Power over Ethernet(PoE,802.3af), WLAN(IEEE 802.3af), Network Access Control(IEEE 802.1x),STP(IEEE 802.1d), RSTP(IEEE 802.1d-2004)

Programming:Non-volatile flash memory programming and configuration through Web GUI

Management and Operation:DHCP and static IP, remote automatic software upgrade, centralized monitoring, status LED

Echo cancellation code:G.167/G.168

INSTALLATION

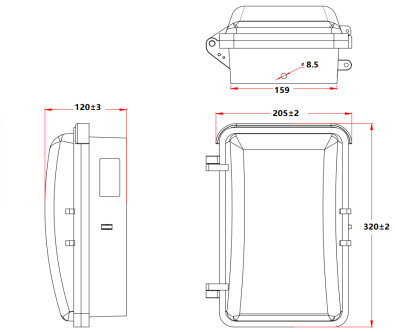







CERTIFICATION

RCM: AS/NZS CISPR 32 Australian communications:AS/CAS004

Australian Equipment-safety: AS/NZS 60950.1:2015

EMC: EN50121(Railway application-Electromagnetic Compatibility)

CE FC IP65 RoHS

PACKAGING







Unit size: 320 *205 *120mm N.W: 5.8KG only telephone speaker 1.5KG +Alarm Lamp 0.33KG

1pcs packing box size: 59*48*25cm UnitN.W: 9.5KG Unit G.W: 10.2KG includespeaker+lamp

6pcs in 1 outer Carton box: size: 730*390*340mm N.W: 57KG G.W: 61.2KG include speaker+lamp

KNTECH

HONGKONG KOON TECHNOLOGY LTD

TEL:0086755 29790158/27448753 Fax:0086755 29790278

Email:marketing@koontech.com www.koontech.com